UNDERSTANDING FLICKER IN AIRFIELD LIGHTING APPLICATIONS

By:
John D. Bullough, Jianchuan Tan, N. Narendran and Jean Paul Freyssinier
Lighting Research Center
Rensselaer Polytechnic Institute
21 Union Street
Troy, NY 12180
Phone: (518) 687-7100; Fax: (518) 687-7120
bulloj@rpi.edu
tanj4@rpi.edu
narenn@rpi.edu
freysj@rpi.edu

PRESENTED AT THE
2014 FAA WORLDWIDE AIRPORT TECHNOLOGY TRANSFER CONFERENCE
Galloway, New Jersey, USA

August 2014

INTRODUCTION

Nearly all electric light sources produce flicker, especially when operated from mains power. Light-emitting diodes (LEDs) can use a wide variety of driving methods, including constant direct current, pulse width modulation, or from mains power using simple rectifiers, each resulting in different amounts of perceived flicker. Quantifying the effects of flicker from light sources is important in specifying light source performance in many lighting applications, including airfield lighting. With funding from the Federal Aviation Administration (FAA) and from the Alliance for Solid State Illumination Systems and Technologies (ASSIST), researchers at the Lighting Research Center (LRC) conducted a series of studies to develop a model to predict the detection and acceptability of stroboscopic effects from light source flicker. Further studies looked at new and efficient electrical LED circuit designs to produce light output waveforms with reduced perception of stroboscopic effects. The present paper summarizes these efforts.

BACKGROUND

Airfield lighting is increasingly using LED sources because of their potential for long operating life and reduced maintenance requirements [1]. They also have some advantages for visibility over incandescent lamps because they produce narrowband colored light and they tend to exhibit relatively small shifts in chromaticity when dimmed compared to incandescent lamps [2]. One method of dimming involves pulse width modulation (PWM) in which the dimming level is proportional to the duty cycle of rapid switching on and off of the LED source. This results in flicker, regular modulation of the LED source as a function of time, which can be perceived directly if the frequency of modulation is less than about 80 Hz [3]. The modulation can also be perceived indirectly via one of several stroboscopic effects. For example, waving an object back and forth rapidly under a flickering light source can result in the detection of multiple images of the object as it moves, sometimes called the *wagon-wheel effect*. Another manifestation of stroboscopic effects that is relevant for aviation signal lighting is the *phantom array* [4]. When a small source of light is modulating and an observer moves his or her eyes between two points in the field of view, a series of images of the light located side by side can sometimes be observed. Of practical significance, stroboscopic effects like the phantom array can be detected for flicker frequencies at which no direct flicker is visible [5].

Bullough et al. [6,7] studied responses to flickering light sources with different frequencies and for different amounts of modulation. Flicker modulation can be defined in terms of the *percent flicker* [8], ranging between 0% and 100% according to the formula:

$$\text{Percent flicker} = [(L_{max} - L_{min})/(L_{max} + L_{min})] \times 100\% \qquad \text{(Eq. 1)}$$

where L_{max} is the maximum instantaneous light output and L_{min} is the minimum instantaneous light output from the light source. If L_{min} is zero, then the percent flicker value will always equal 100%.

Another quantity used to characterize the amount of modulation is the *flicker index* [9], defined as the area under a light-output/time curve above the average light output, divided by the

entire area under the curve. Flicker indices can range from 0 to values approaching 1. Bullough et al. [6] developed a model of detection and acceptability of stroboscopic effects from flickering illumination with frequencies from 100 to 10,000 Hz and with percent flicker values from 5% to 100% (or flicker indices from 0.025 to 0.5). The percentage of times stroboscopic effects could be detected (d) was modeled as:

$$d = [(25p + 140)/(f + 25p + 140)] \times 100\% \qquad \text{(Eq. 2)}$$

where p is the percent flicker value and f is the flicker frequency. The rated acceptability of stroboscopic effects (a) on a scale of –2 (very unacceptable) to +2 (very acceptable) was modeled as:

$$a = 2 - 4/[1 + f/(130 \log p - 73)] \qquad \text{(Eq. 3)}$$

where p and f are defined as in Equation 2. Application of Equation 3 probably depends upon the precise context in which stroboscopic effects are seen, especially the presence of rapidly moving objects. Bullough et al. [5] reported that 100 Hz, 100% flicker was judged as "very acceptable" (using the same scale from –2 to +2) after study participants spent a few minutes working on a laptop computer with little other movement present. In comparison, Equation 3 predicts an average acceptability rating value of –0.6, approaching "somewhat unacceptable," which was elicited after participants in the latter study [6] waved a rod underneath a luminaire producing flickering illumination. Regardless of the acceptability, Equation 2 suggests that flicker at frequencies as high as 1000 Hz or higher can produce detectable stroboscopic effects, if the modulation is high enough.

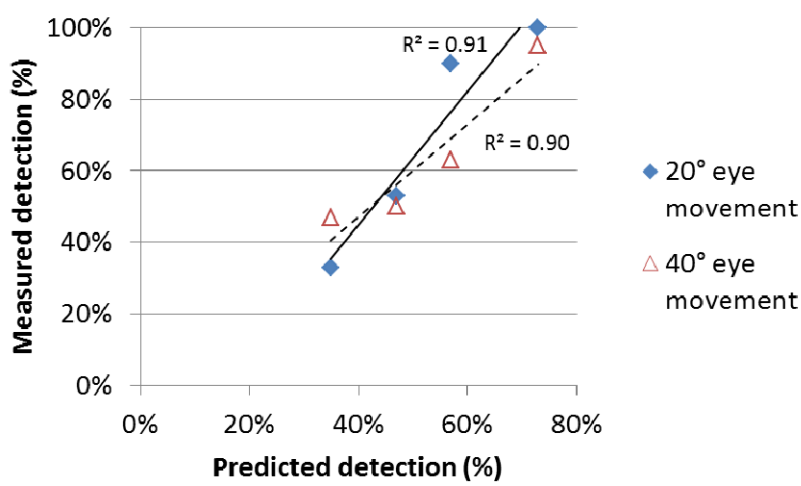

Figure 1. Comparison of predicted and measured detection of stroboscopic effects predicted by Bullough et al. [6] and measured by Roberts and Wilkins [10].

The studies by Bullough et al. [5,6] were made under a flickering light source used to provide task illumination, where wagon-wheel types of stroboscopic effects would be most evident. In the context of aviation signal lighting, the phantom array [4] effect is more relevant as a pilot scans his or her eyes across the airfield during takeoff, landing or taxiing. Roberts and Wilkins [10] measured the phantom array response to a point source of light operated at 100% flicker

using a sine-wave temporal pattern at 1000, 2000, 3000 and 5000 Hz. The mean percentages of times observers detected the phantom array when making 20° and 40° eye movements were very strongly correlated ($r^2 \geq 0.90$) with the detection percentages predicted from Equation 2 (Figure 1). The correlations suggest that Equation 2 [6] can be used to assess stroboscopic effects such as those from aviation signal lighting, and that there do not appear to be major differences in detection of the phantom array for different eye movement sizes.

IMPLICATIONS FOR LED DRIVING CIRCUITRY

There are two characteristics of how LEDs produce light that are relevant to the topic of flicker. The first one is that, within a nominal range, the relationship between the light output and the forward current through an LED is nearly linear. The second one is that the time it takes to turn on or turn off an LED is very short. These relationships make LEDs intrinsically dimmable light sources and thus their light output can be conveniently adjusted by either controlling the amount of current (e.g., constant current driving) or the time (e.g., PWM driving) that a given current flows through an LED's junction. However, as mentioned, the choice of driving method has an effect on how much flicker is produced by the lighting system. Electrically, LEDs operate as low-voltage direct-current (dc) loads and for most applications these electrical characteristics almost always mean that LEDs need to be operated through a circuit that transforms alternating current (ac) mains power to dc and from a higher voltage (e.g., 120 Vac) down to a much lower voltage (e.g., 12-24 Vdc). Generally, driving LEDs under a constant current regime results in the least amount of light modulation. Generally too, driving LEDs under a PWM regime results in higher modulation because most PWM circuits pulse the LEDs between zero and a maximum current value, which results in a corresponding light output modulation between zero (no light output) and maximum output. The amount of perceived flicker or stroboscopic effects from a PWM-driven LED circuit depends on the frequency of the pulsing and can be estimated from Equations 1 to 3 above.

Since the mid-2000s, manufacturers have developed LED products that can operate directly from mains power. These products are generically called ac-LEDs. Not having a driver circuit separate from the LED light source has potential advantages for many applications in terms of size and cost, and reliability. Operating LEDs directly from mains power is relatively simple. This driving technique is achieved by connecting a large number of LEDs in series so that the forward voltage of the array is close to the mains voltage (e.g., 120 Vac) and by using a simple diode rectifier, a bridge rectifier, or by connecting two LED arrays in reverse parallel. In the first case the LED array only produces light during half the ac voltage cycle, which results in significant stroboscopic effects and thus is not common practice. In the second case, light is produced by the single array during both halves of the ac voltage cycle. Similarly, in the third case, light is produced by one array during the first cycle of the ac waveform and by the other array during the second half of the cycle. The second and third methods are similar to how incandescent lamps operate and result in significantly less flicker than the option with a diode rectifier, but because the light output response from LEDs is so fast and because there is no thermal inertia, LEDs operated under this driving scheme result in more stroboscopic effects than that from incandescent lamps. It is worth noting as well that because the response from LEDs is so fast, there is always a short period of time where neither one of the two arrays produces light.

While different solutions have been proposed to reduce stroboscopic effects from ac-LEDs, these solutions often have a trade-off with electrical efficiency, power factor, or cost.

By taking advantage of the fundamental phase shift between current and voltage in capacitive circuits, LRC researchers have developed a circuit design to reduce light flicker from ac-LEDs that maintains a normal power factor (≥0.7) and high power efficiency (≥85 percent) [11,12]. Like most ac-LED designs, the circuit is based on two LED arrays in reverse parallel but in this case, one array has a resistive load added in series and the other array has a capacitive load added in series. By controlling the phase shift resulting from the capacitive load, it is possible to reduce or eliminate the time during which neither one of the LED arrays produces light. In other words, the shift in light waveform from one array overlaps with the previous waveform, effectively filling in the void in light output and thus reducing stroboscopic effects. Figure 2 shows a schematic circuit of the proposed design.

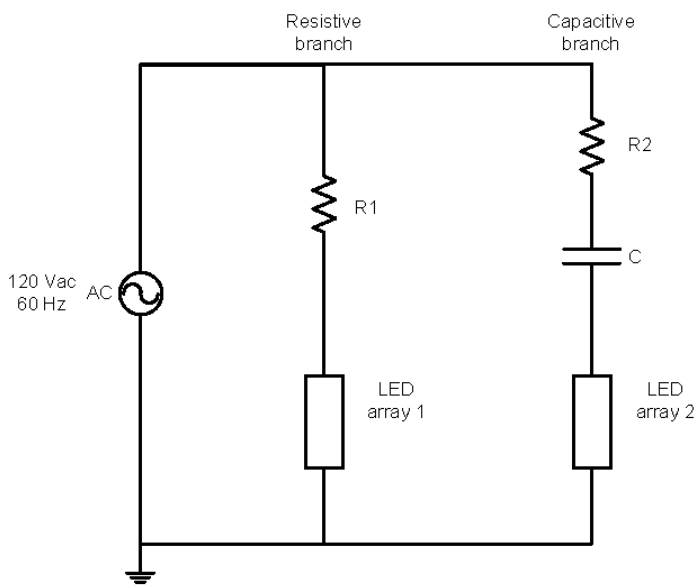

Figure 2. Schematic of the LRC proposed circuit to reduce stroboscopic effects from LEDs operating directly from main power. By optimizing the electrical phase shift between the two LED arrays, the circuit achieves the goals of acceptable stroboscopic effects while maintaining normal power factor and high overall electrical efficiency.

The resistive and capacitive characteristics of the proposed circuit were determined first through a theoretical analysis and were then confirmed through experimentation. These studies identified an optimum phase shift by analyzing systematically the performance of the circuit using flicker, electrical efficiency, and power factor as the main metrics of merit. For the analyses, a maximum percent flicker criterion of 33 percent was identified as the goal for the circuit based on the work of Bullough et al. [5,6]. In terms of electrical characteristics, the goals included a power factor equal or greater than 0.7 and an overall electrical efficiency equal or greater than 85 percent.

This study confirmed that it is possible to simultaneously achieve the goals of reduced flicker and electrical efficiency, and can be used as the basis to optimize different designs based on the

electrical characteristics of the LED arrays used or different design priorities (e.g., flicker index, power factor, or efficiency).

ACKNOWLEDGMENTS

These studies were funded by the Federal Aviation Administration (FAA Cooperative Agreement 10-G-013), the Alliance for Solid-State Illumination Systems and Technologies (ASSIST), and the Lighting Research Center at Rensselaer Polytechnic Institute. The authors would like to thank Donald Gallagher, FAA Visual Guidance Program Manager, Airport Safety R&D, and Andrew Bierman, Yiting Zhu, Terry Klein, Yi-Wei Liu, Martin Overington, John Bullough and Howard Ohlhous in the Lighting Research Center for their assistance and contributions.

REFERENCES

1. Bullough, J. D., *Issues With Use of Airfield LED Light Fixtures, ACRP Synthesis 35*, Transportation Research Board, Washington, DC, 2012.
2. Bullough, J. D., Skinner, N. P., Bierman, A., Milburn, N. J., Taranta, R. T., Narendran, N., and Gallagher, D. W., *Nonincandescent Source Aviation Signal Light Colors, DOT/FAA/TC-TN12/61*, Federal Aviation Administration, Washington, DC, 2012.
3. Kelly, D. H., "Visual Response to Time-Dependent Stimuli: I. Amplitude Sensitivity Measurements," *Journal of the Optical Society of America*, Vol. 51, pp. 422-429, 1961.
4. Hershberger, W. A., and Jordan, J. S., "The Phantom Array: A Perisaccadic Illusion of Visual Direction," *Psychological Record*, Vol. 48, pp. 21-32, 1998.
5. Bullough, J. D., Sweater Hickcox, K., Klein, T. R., and Narendran, N., "Effects of Flicker Characteristics from Solid-State Lighting on Detection, Acceptability and Comfort," *Lighting Research and Technology*, Vol. 43, pp. 337-348, 2011.
6. Bullough, J. D., Sweater Hickcox, K., Klein, T. R., Lok, A., and Narendran, N., "Detection and Acceptability of Stroboscopic Effects from Flicker," *Lighting Research and Technology*, Vol. 44, pp. 477-483, 2012.
7. Alliance for Solid-State Illumination Systems and Technologies (ASSIST), "ASSIST recommends…Flicker parameters for reducing stroboscopic effects from solid-state lighting systems," Lighting Research Center, Troy NY, May 2012. Online http://www.lrc.rpi.edu/programs/solidstate/assist/recommends/flicker.asp.
8. Rea, M. S. (editor), *IESNA Lighting Handbook: Reference and Application, Ninth Edition*, Illuminating Engineering Society, New York, NY, 2000.
9. Eastman, A. A., and Campbell, J. H., "Stroboscopic and Flicker Effects from Fluorescent Lamps," *Illuminating Engineering*, Vol. 47, pp. 27-35, 1952.
10. Roberts, J. E., and Wilkins, A. J., "Flicker Can be Perceived During Saccades at Frequencies in Excess of 1 kHz," *Lighting Research and Technology*, Vol. 45, pp. 124-132, 2013.
11. Tan, J., "An approach to reduce AC LED flicker," M.S. thesis, School of Architecture, Rensselaer Polytechnic Institute, Troy, NY, 2012.
12. Tan, J., and N. Narendran, "A Driving Scheme to Reduce AC LED Flicker," *Proceedings of SPIE 8835: 88350O*, 2013.