Boeing Product Overview and R & D Needs

FAA Working Group Meeting

LIFECYCLE SOLUTIONS

Michael J. Roginski, P.E.

Principal Engineer – Boeing Airport Compatibility Engineering, Pavement Lead

April 21-23, 2012, Atlantic City, New Jersey

BOEING is a trademark of Boeing Management Company.
Copyright © 2008 Boeing. All rights reserved.

Boeing Market Outlook

LIFECYCLE SOLUTIONS

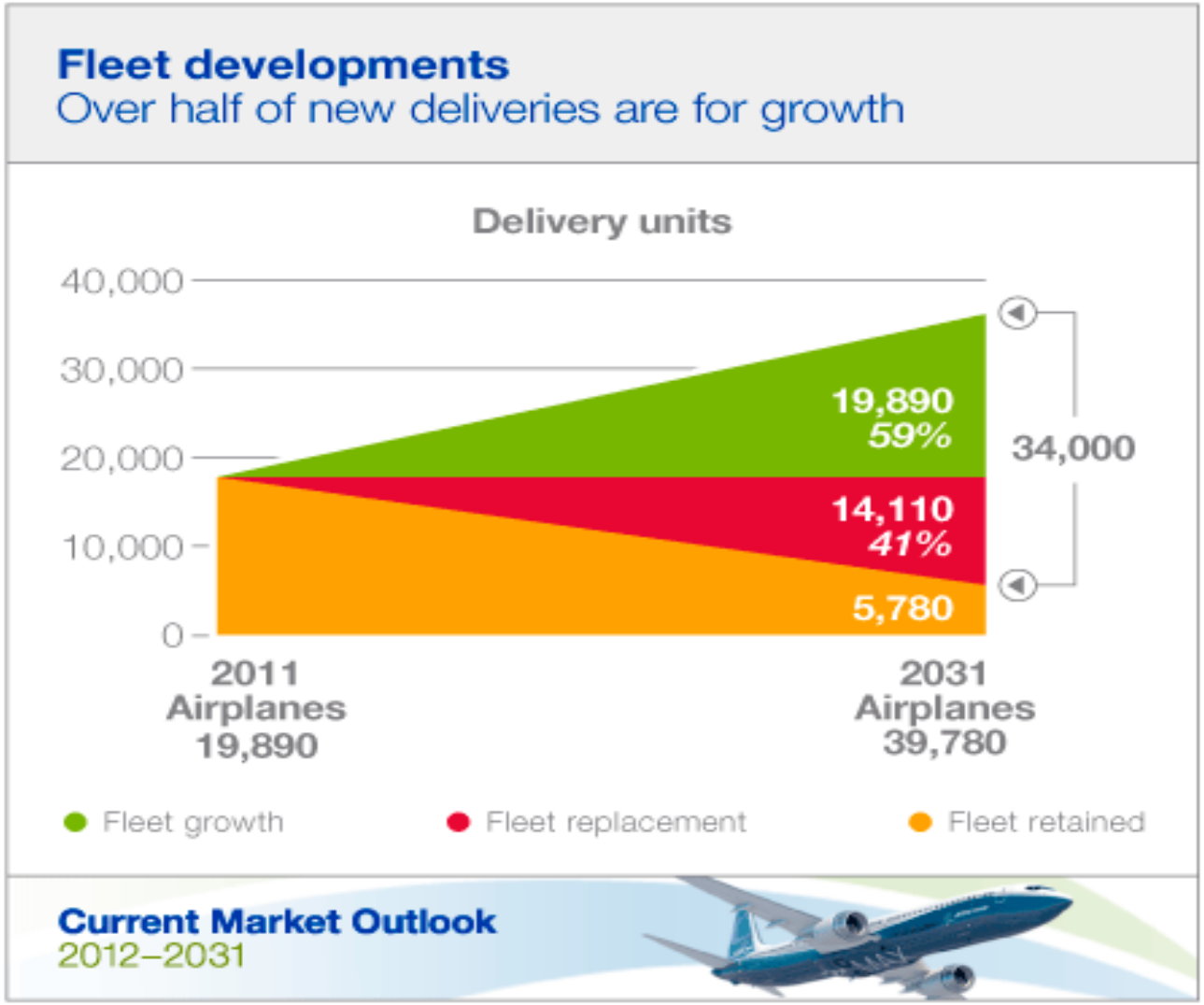

COPYRIGHT © 2008 THE BOEING COMPANY

Range, Capacity Comparison of Boeing Aircraft

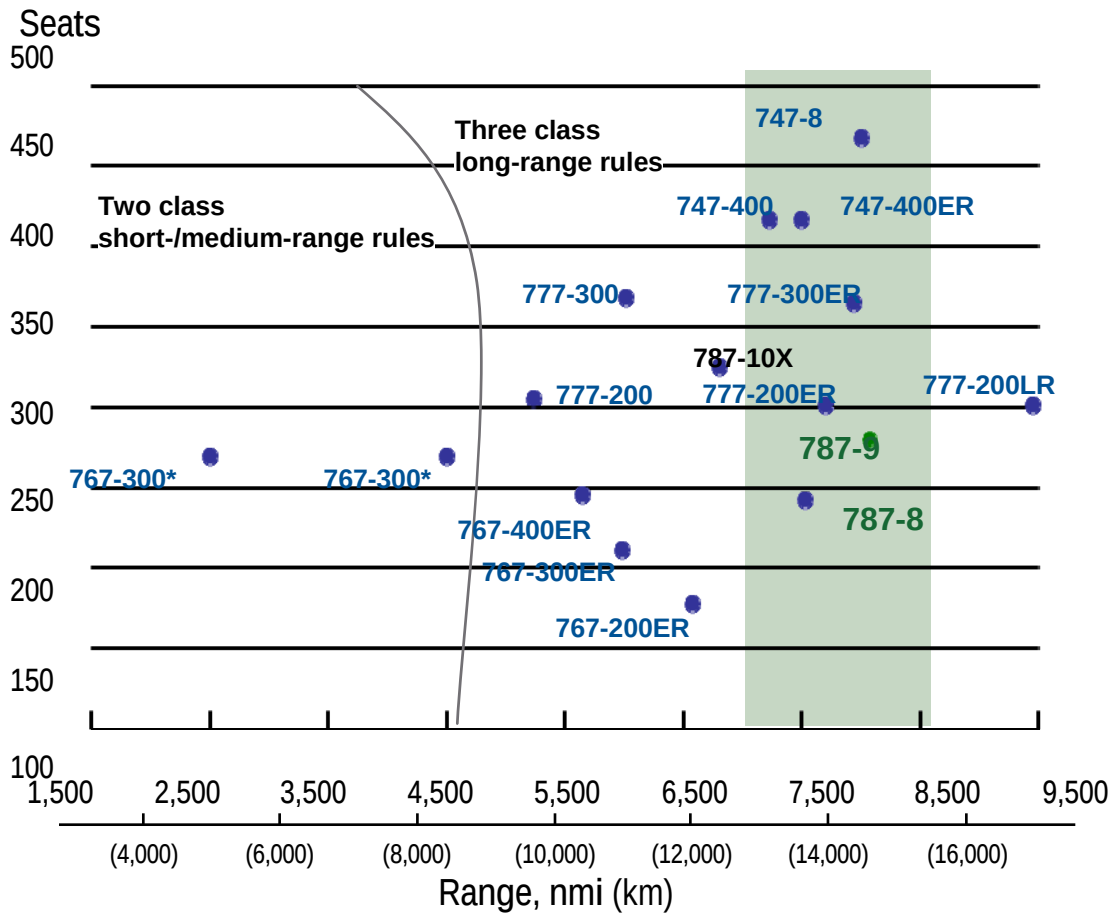

* Reduced takeoff weight

COPYRIGHT © 2008 THE BOEING COMPANY

The 737 MAX advantage

LIFECYCLE SOLUTIONS

MAX efficiency

MAX reliability

MAX passenger appeal

COPYRIGHT © 2008 THE BOEING COMPANY

1,185 MAX firm orders

LIFECYCLE SOLUTIONS

UNITED	100
SOUTHWEST.COM	150
Lion air	201
norwegian.com	100
Virgin australia	23
AIR LEASE CORPORATION	80
AVOLON	15
GE Capital Aviation Services	75
GOL	60
Alaska Airlines	37
ALAFCO	20
AEROMEXICO	60
SILKAIR	31
AVIATION CAPITAL GROUP	60
American Airlines	100
ICELANDAIR	16
UNIDENTIFIED CUSTOMERS	57

- As of February 2013

COPYRIGHT © 2008 THE BOEING COMPANY

The 737 MAX is designed for maximum advantage

Increased range and maximum takeoff weight with reduced fuel burn

Fuselage
- Local fuselage regauged
- Strengthened for rotor burst

Systems
- Fly-by-wire spoilers
- ECS digital bleed control
- Updated systems for new engine

Flight Deck
- New large displays

Nose landing gear
- Gear lengthened

Main landing gear
- Regauged main gear

Aft body
- Aerodynamic improvement
- New inlet with retractable APU door

New CFM LEAP-1B engine
- 69-in fan diameter
- Optimized core
- New, larger composite swept fan
- Higher bypass ratio
- New nacelle and strut

Wing
- Advanced Technology winglet
- Wing strengthening
- Strengthened main gear supports

COPYRIGHT © 2008 THE BOEING COMPANY

737 MAX engine installation

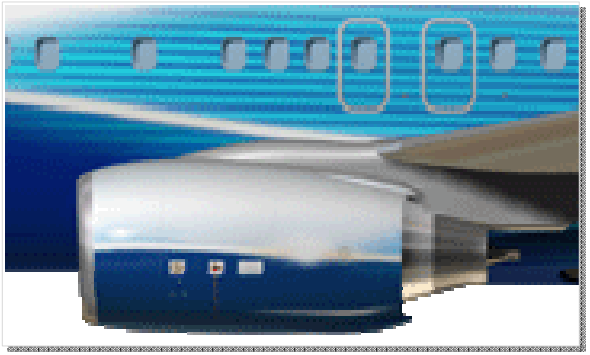

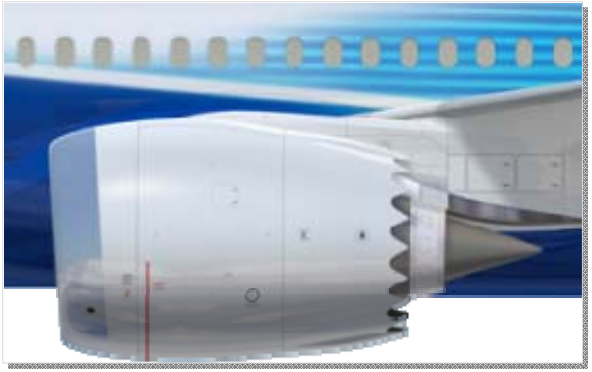

737NG

737 MAX

Aerodynamic integration of the 737 MAX engine with the wing is similar to that of the 787

787

COPYRIGHT © 2008 THE BOEING COMPANY

Dimension comparison

737-7 MAX, 737-8 MAX and 737-9 MAX

- 737-7 MAX
- 737-8 MAX
- 737-9 MAX

	737NG MTOW	737 MAX MTOW	Tire Pressure
737-700 / 737-7	154,500-lb	159,500-lb	197/ 184 psi
737-800 / 737-8	174,200-lb	181,200-lb	204/ 213 psi
737-900ER / 737-9	187,700-lb	194,700-lb	220 / 230 psi

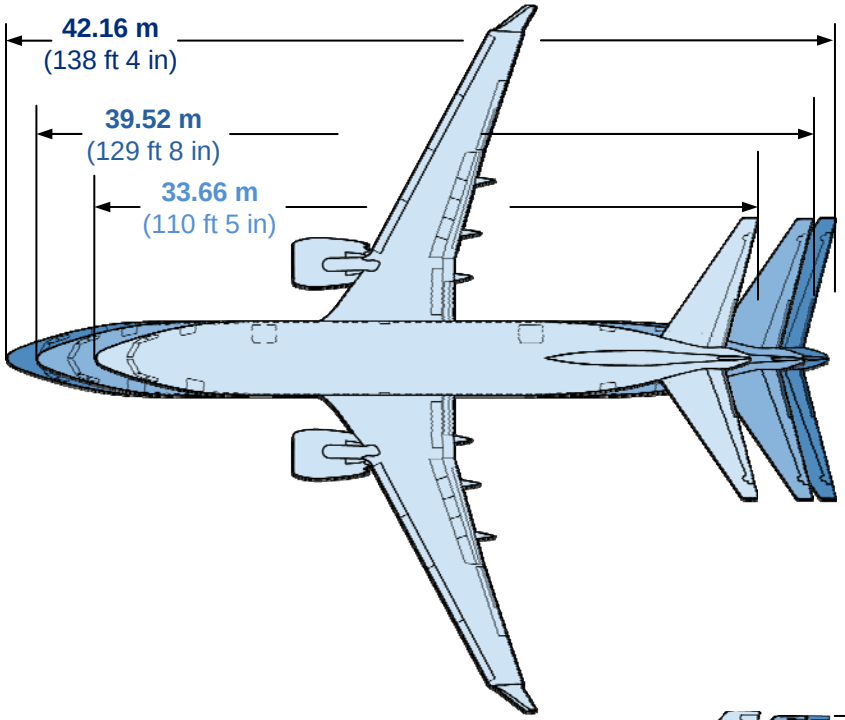

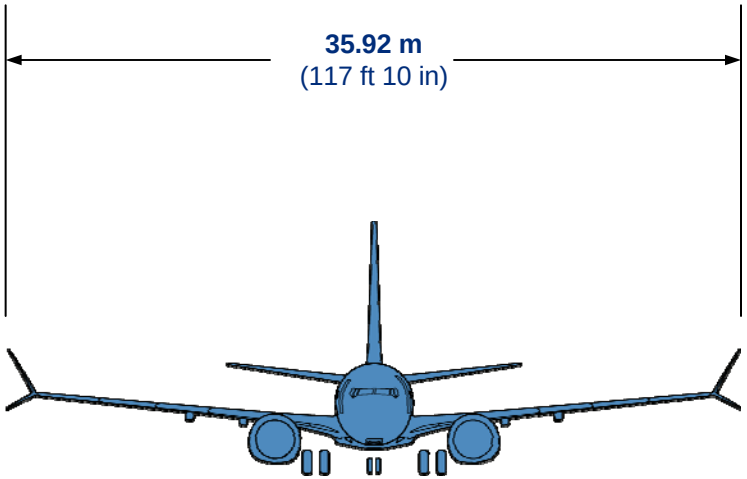

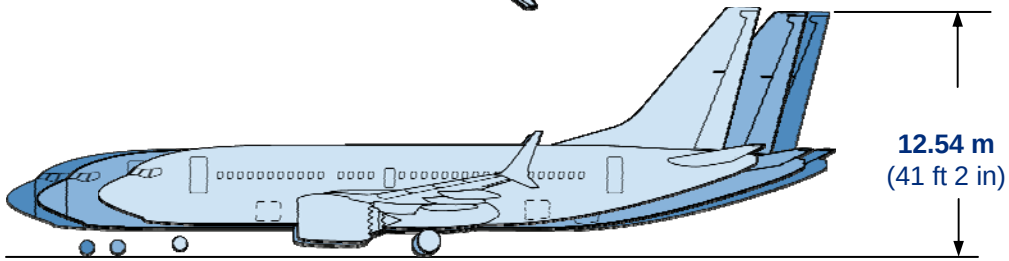

COPYRIGHT © 2008 THE BOEING COMPANY

747-8

COPYRIGHT © 2008 THE BOEING COMPANY

747-8 Intercontinental fits the heart of the large airplane market

LIFECYCLE SOLUTIONS

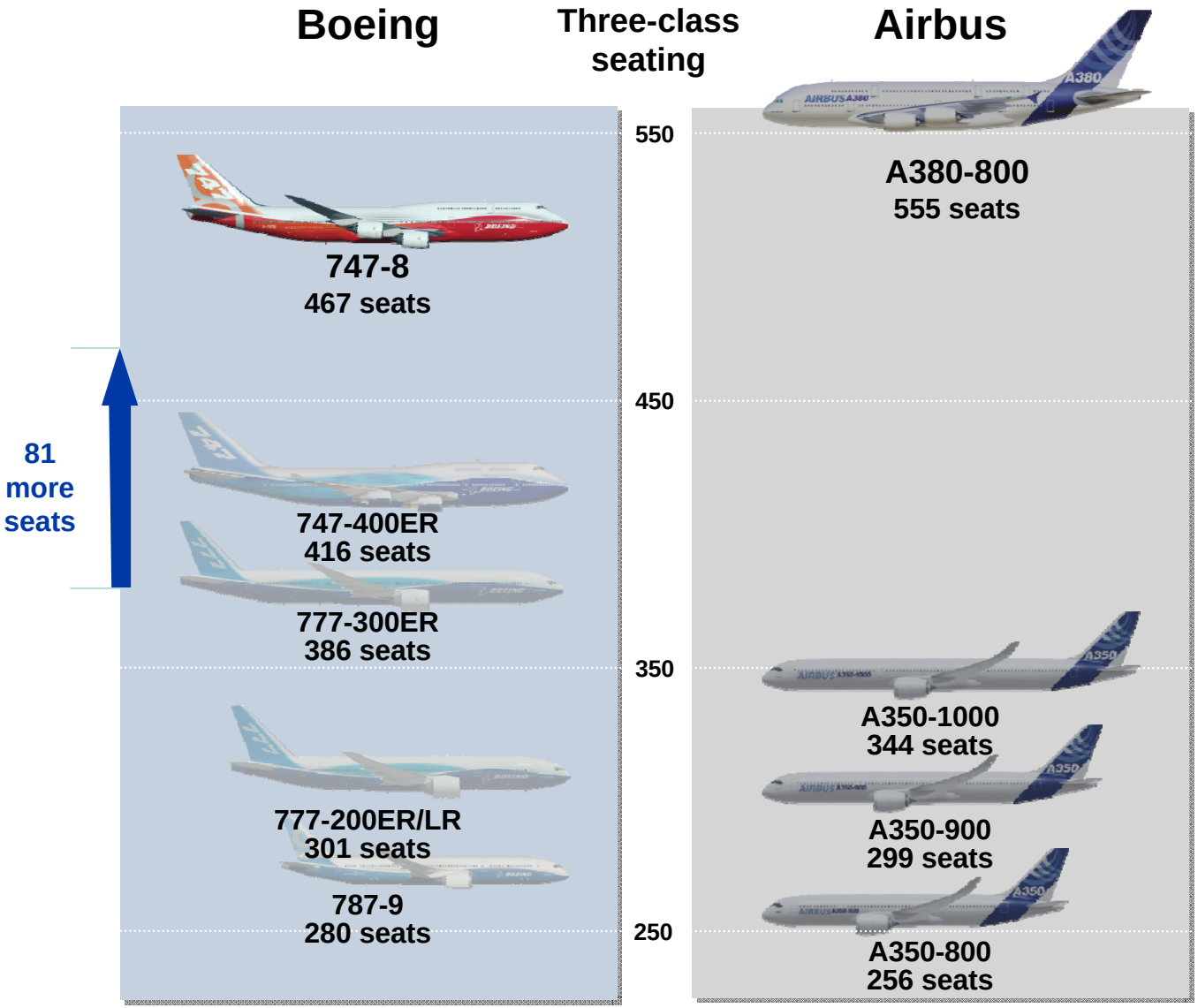

COPYRIGHT © 2008 THE BOEING COMPANY

Advanced wing based on 787 experience

LIFECYCLE SOLUTIONS

Optimized for 747-8

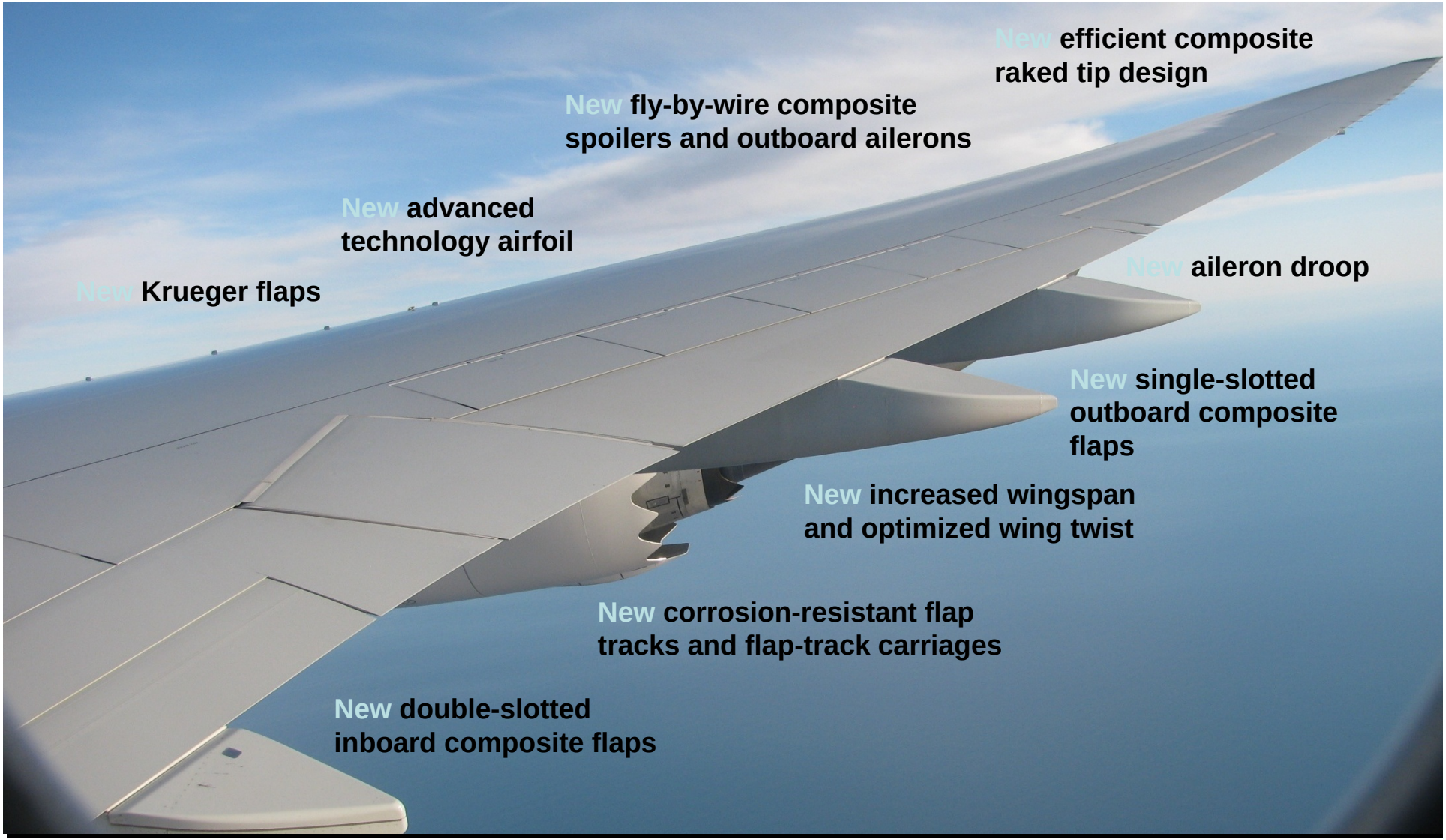

COPYRIGHT © 2008 THE BOEING COMPANY

747-8 program schedule

LIFECYCLE SOLUTIONS

COPYRIGHT © 2008 THE BOEING COMPANY

130 announced orders and commitments

14 customers and 27 airplanes delivered

LIFECYCLE SOLUTIONS

747-8		747-8F	
5 Air China	20 Lufthansa	13 cargolux	14 NCA Nippon Cargo Airlines
9 Boeing Business Jets	5 Korean Air	9 Atlas Air	10 Cathay Pacific
4 Transaero	15 Unidentified	10 DHL	7 Korean Air
	2 Arik	5 AirBridgeCargo	2 GE Capital

As of December 17, 2012

COPYRIGHT © 2008 THE BOEING COMPANY
COPYRIGHT © 2011 THE BOEING COMPANY

Operational Guidelines are Airplane-Specific

LIFECYCLE SOLUTIONS

- **Critical airport dimensions will be driven by aircraft spans* and height**
  - **747-8 has same dimensions as 747-400 except for minor wingspan increase (3.5 m) and length increase (5.6 m)**

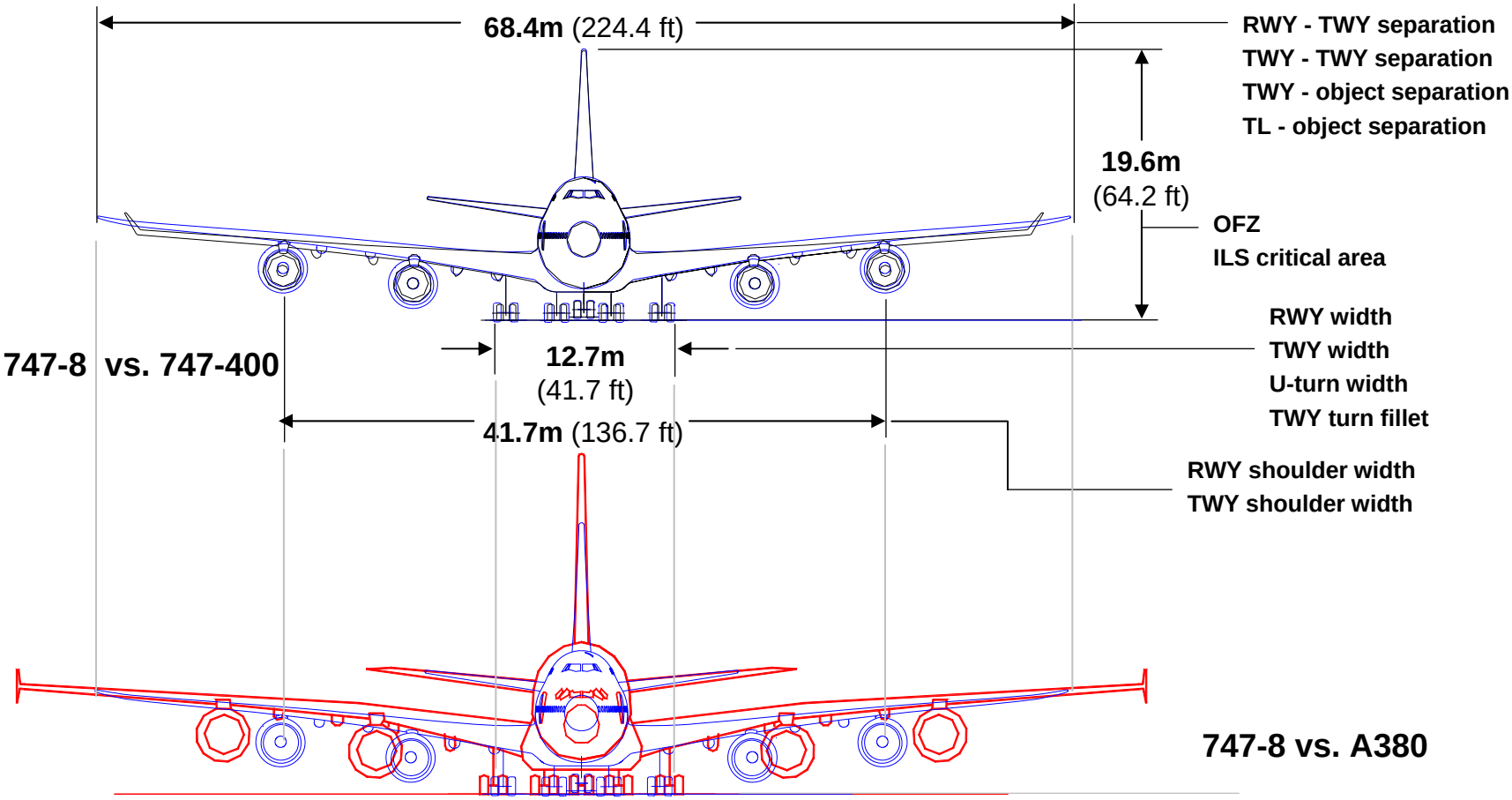

* Wingspan, outer engine span and main landing gear span

COPYRIGHT © 2008 THE BOEING COMPANY

747-8F in Service at 100 Airports Worldwide

Data as of 02/13/2012

Beirut

Dubai

Bangkok

Budapest

Hong Kong

Dammam

Baku

Stansted

Atlanta

Barcelona

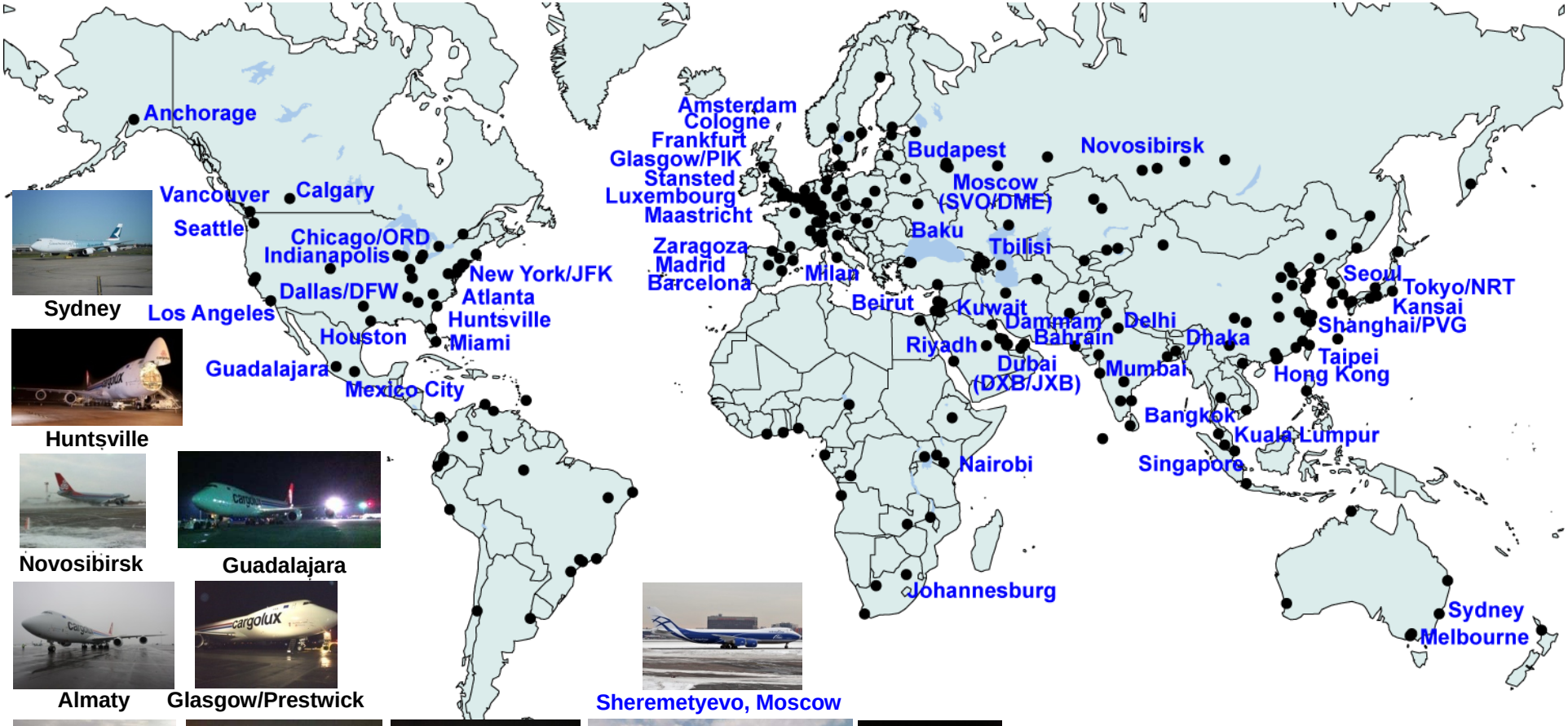

Sydney

Huntsville

Novosibirsk

Guadalajara

Almaty

Glasgow/Prestwick

Sheremetyevo, Moscow

Riyadh

Los Angeles

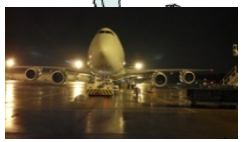
Houston

Johannesburg

Mexico

- 747-8 Planned Destination Airports

Airports with 747-8 Operations (Destination/Tech Stops) to Date

COPYRIGHT © 2008 THE BOEING COMPANY

747-8 vs. 747-400 ER Comparison

LIFECYCLE SOLUTIONS

	747-8	747-400ER
Weight	990,000 lbs	913,000 lbs
Tandem spacing	46.8” X 56.5” 221 psi tires	44”X 58” 230 psi tires
Wing Span	224.4 ft / 68.4 m	213.0 ft /64.9 m
Fuselage length	250.2 ft / 76.3 m	231.8 ft / 70.7m
Tail height	64.2 ft / 19.6 m	64.0 ft / 19.5 m

747-8
747-400 ER

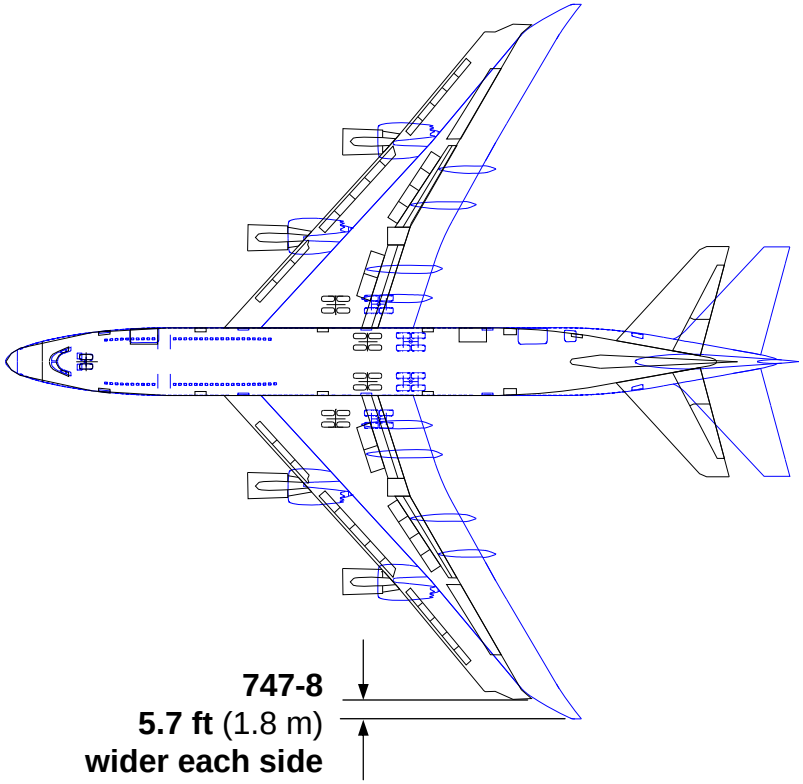

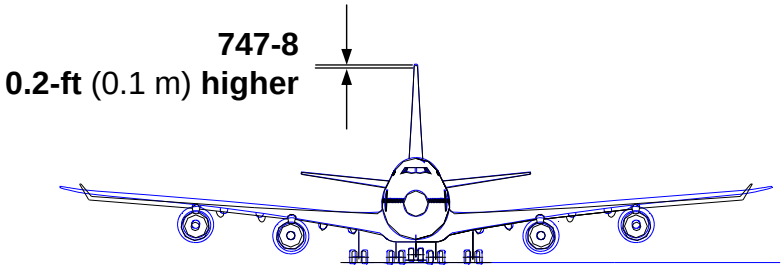

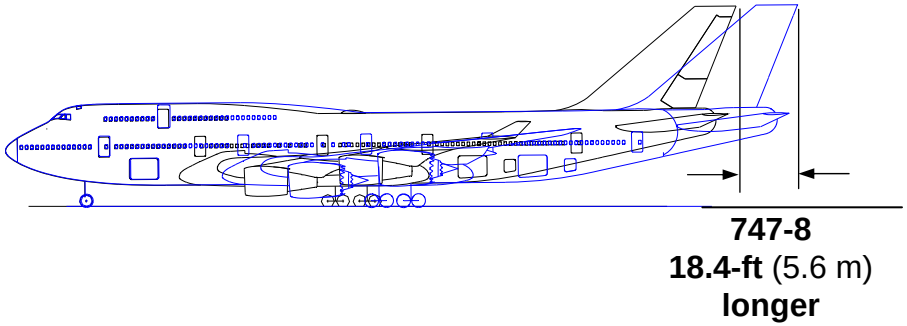

COPYRIGHT © 2008 THE BOEING COMPANY

777X

LIFECYCLE SOLUTIONS

COPYRIGHT © 2008 THE BOEING COMPANY

Projected Entry Into Service – 2019

- Maximum ramp weight similar to 777-300ER- ACN and tire pressure equivalent

- New composite wing and engines- Group VI wingspan- Group V during ground maneuvering and parking phase. 11 ft wing fold

- Slight wheel base increase (~3-4 ft) - still less than A340-600

- Multiple models: 777-8X, -9X

COPYRIGHT © 2008 THE BOEING COMPANY

787 First Flight – December 2009

LIFECYCLE SOLUTIONS

COPYRIGHT © 2008 THE BOEING COMPANY

Unprecedented customer response

LIFECYCLE SOLUTIONS

890 orders from 58 customers (49 airplanes delivered)

- As of February, 2013

*Leasing operator

COPYRIGHT © 2008 THE BOEING COMPANY

The 787 is now in service

LIFECYCLE SOLUTIONS

Certified in 2011

2006	2007	2008	2009	2010	2011	2012	2013	2014
Start of major assembly	Roll out	Power on	787-8 first flight		787-8 enters service	Start 787-9 fuselage assembly	787-9 first flight	787-9 enters service

COPYRIGHT © 2008 THE BOEING COMPANY

787-9 General Arrangement

LIFECYCLE SOLUTIONS

FAA Airport Design Group 5 – ARFF Index E
ICAO Aerodrome Reference Code E – RFFS Category 9

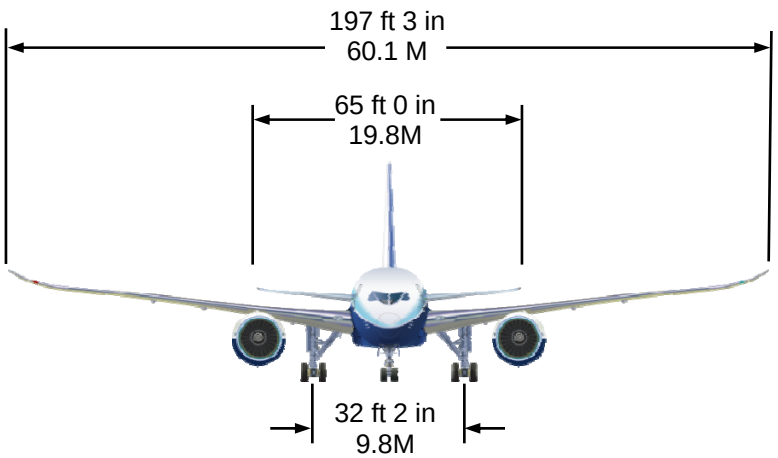

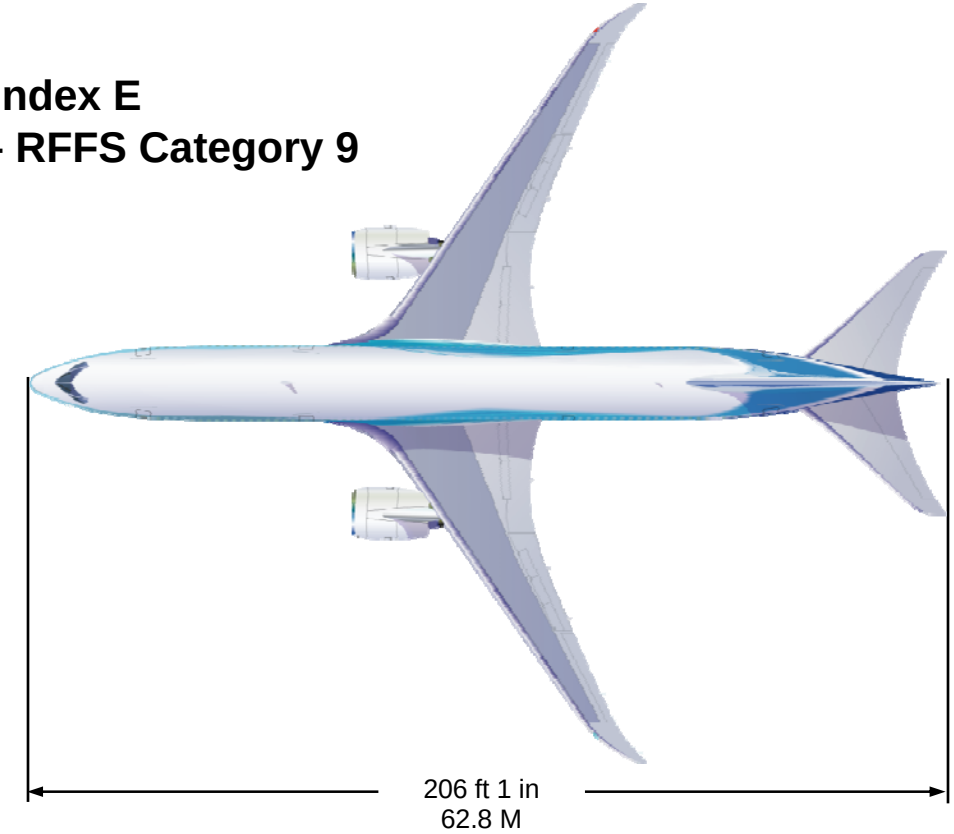

Projected Entry Into Service – 2014

COPYRIGHT © 2008 THE BOEING COMPANY

Landing Gear Configuration

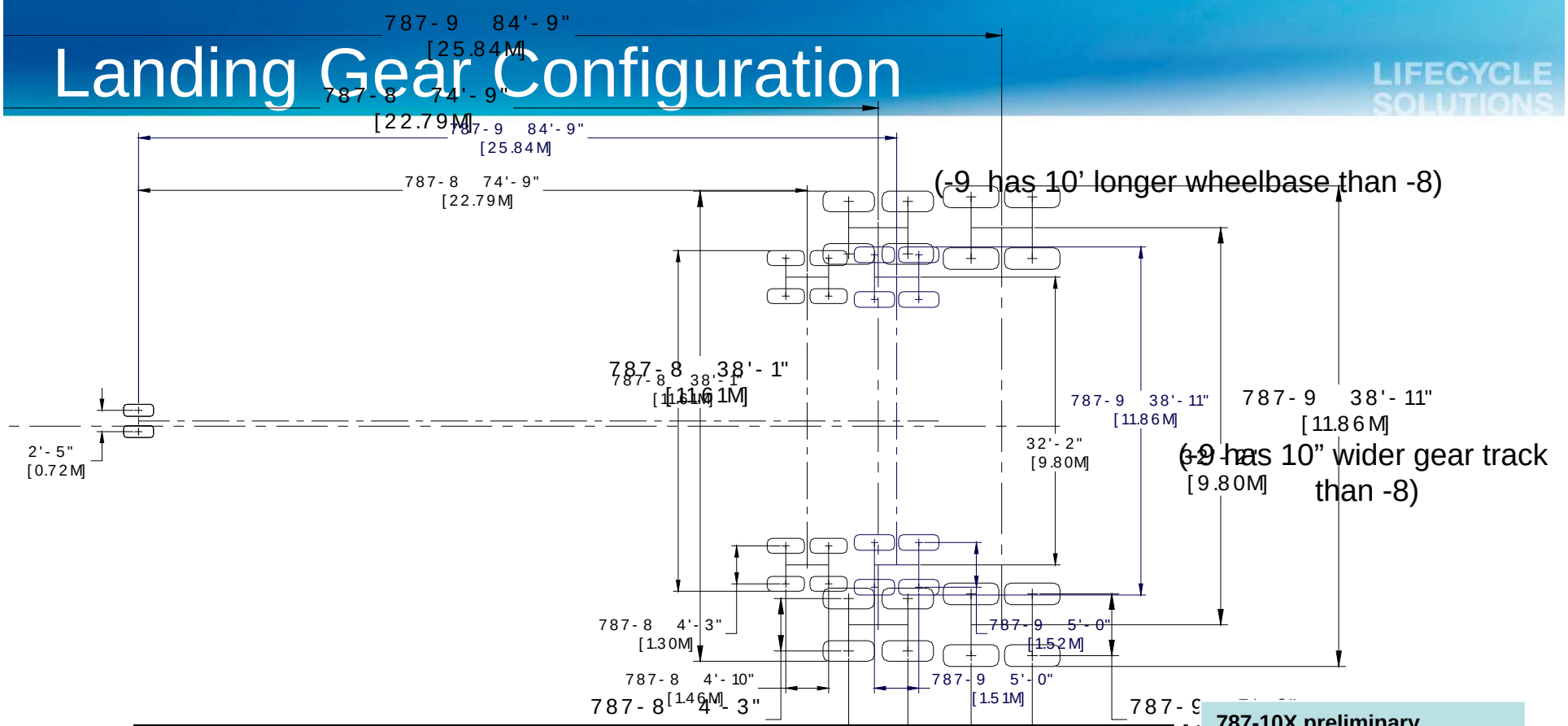

		787-8	787-9 (Preliminary Data)
Maximum Design Taxi Weight	**LB**	**503,500**	**555,000**
	KG	**228,384**	**251,744**
Nose Gear Tire Size	**IN**	**40x16.0 R16/26PR**	**40x16.0 R16/26PR**
Nose Gear Tire Pressure	**PSI**	**187**	**183**
	KG/CM²	**13.15**	**12.87**
Main Gear Tire Size	**IN**	**50x20.0 R22/34PR**	**54x21.0 R23/38PR**
Main Gear Tire Pressure	**PSI**	**228**	**224**
	KG/CM²	**16.03**	**15.75**

787-10X preliminary
559,000 Max taxi weight
224 psi main gear tires
Same main gear geometry as -9
10' increase in wheelbase from -9

COPYRIGHT © 2008 THE BOEING COMPANY

R&D Needs: Research, Engineering and Development Advisory Committee (REDAC)

LIFECYCLE SOLUTIONS

- Completion of updates to FAARFIELD, COMFAA. New flexible failure model in Faarfield should improve compatibility with COMFAA PCN's. Long term: Study possible PCN procedure using Faarfield- layered elastic techniques.

- Accelerated Pavement Test Vehicle (APTV) test-bed, when completed, will help provide research into improved materials as the upward trend in aircraft tire pressures and wheel loads continues and pavement life is extended beyond 20 years.

- Aircraft braking friction studies continue with the outfitting of the test 727-200 with gauging and measuring devices to capture deceleration, g-loading and torsion across the landing gear. These tests will help gain a better understanding of aircraft performance on contaminated runways using actual aircraft data.

- Overload tests will help in understanding the effect of occasional aircraft overload on pavement life. Research results could also provide a more technically based ICAO overload guidance.

COPYRIGHT © 2008 THE BOEING COMPANY