Technology Transfer: Naval Application to Airside Solution
The Automation of the Passenger Boarding Bridge

by:
Dr. Atef Tadros
Director of Engineering
Indal Technologies Inc.
3570 Hawkestone Road
Mississauga, ON L5C 2V8
Canada
Phone: (905) 275-5300; Fax: (905) 273-7004
atef_tadros@indaltech.com

PRESENTED FOR THE
2004 FAA WORLDWIDE AIRPORT TECHNOLOGY TRANSFER CONFERENCE
Atlantic City, New Jersey, USA

April 2004

INTRODUCTION

This paper details a program at Indal Technologies Inc. (ITI) to design, develop and test a system to automate the movement of a passenger boarding bridge utilizing technology already developed for a naval system used to assist helicopter landings on the flight decks of small surface combatants. This Automated Passenger Bridge (APB) system (patent pending) is now through airport testing and readied for operational trials by Air Canada at Lester B. Pearson International Airport in Toronto.

TECHNOLOGY TRANSFER

The technology for the design of the APB system is a derivative of ITI's Aircraft Ship Integrated Secure and Traverse (ASIST) system (Figure 1). ASIST employs a photogrammetry-based position sensing system to track the helicopter movement over the flight deck. The position sensing system identifies the helicopter by a predefined pattern formed by a set of four infrared (IR) beacons mounted on the helicopter. Deck mounted cameras identify the beacons of the helicopter and track its movement relative to the ship. The position sensing system sends signals to a set of pilot visual cues to guide the pilot to the correct hover position prior to landing. The position is also fed to a rapid securing device, which is tracking and following the movement of the helicopter so that, upon landing the helicopter is never more than 30 cm from the securing device, and upon landing the helicopter can be secured within two seconds.

The ASIST system has been in operational service for over 10 years and is currently installed on 40 ships with 4 navies worldwide.

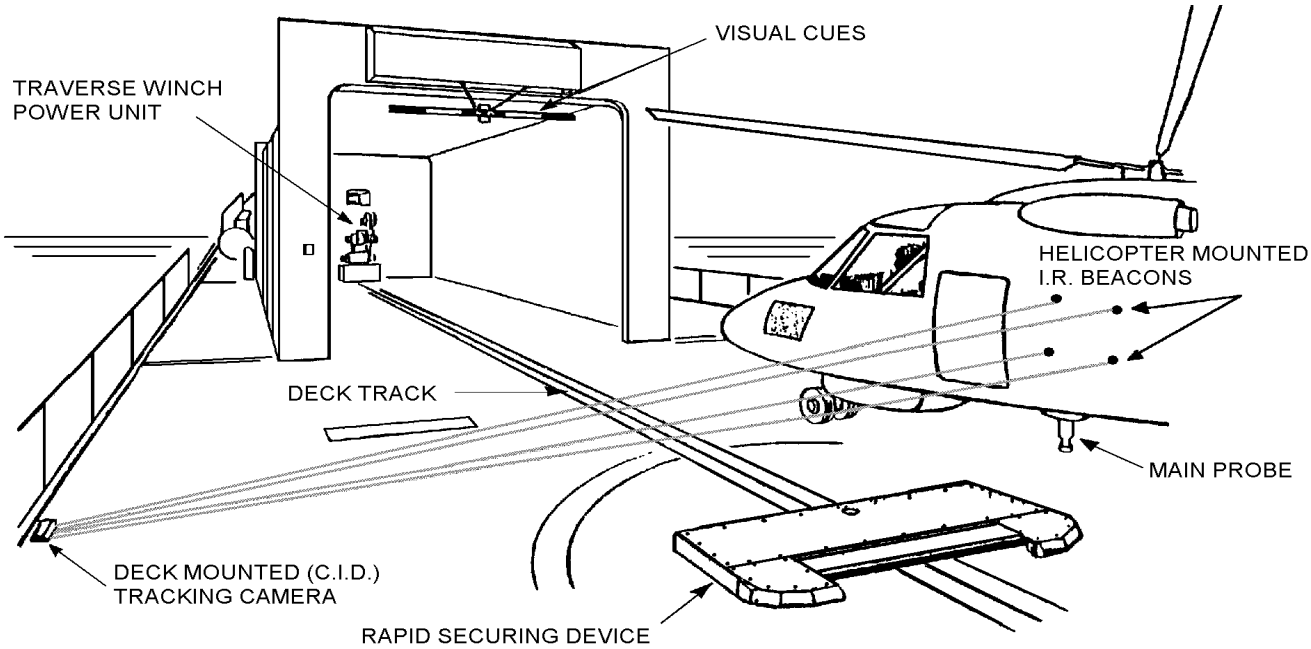

Figure 1: ASIST System

AUTOMATED PASSENGER BRIDGE DESCRIPTION

The APB system employs the same system elements as the ASIST system, except for the IR beacons, to continuously track the location of the aircraft door, and control the bridge movements to automatically dock the bridge to the aircraft and provide retraction to the home position without an operator. Figure 2 shows the equipment components, the camera, the system control and processing unit. Much of the software for the position sensing system is the same as that used in the ASIST system.

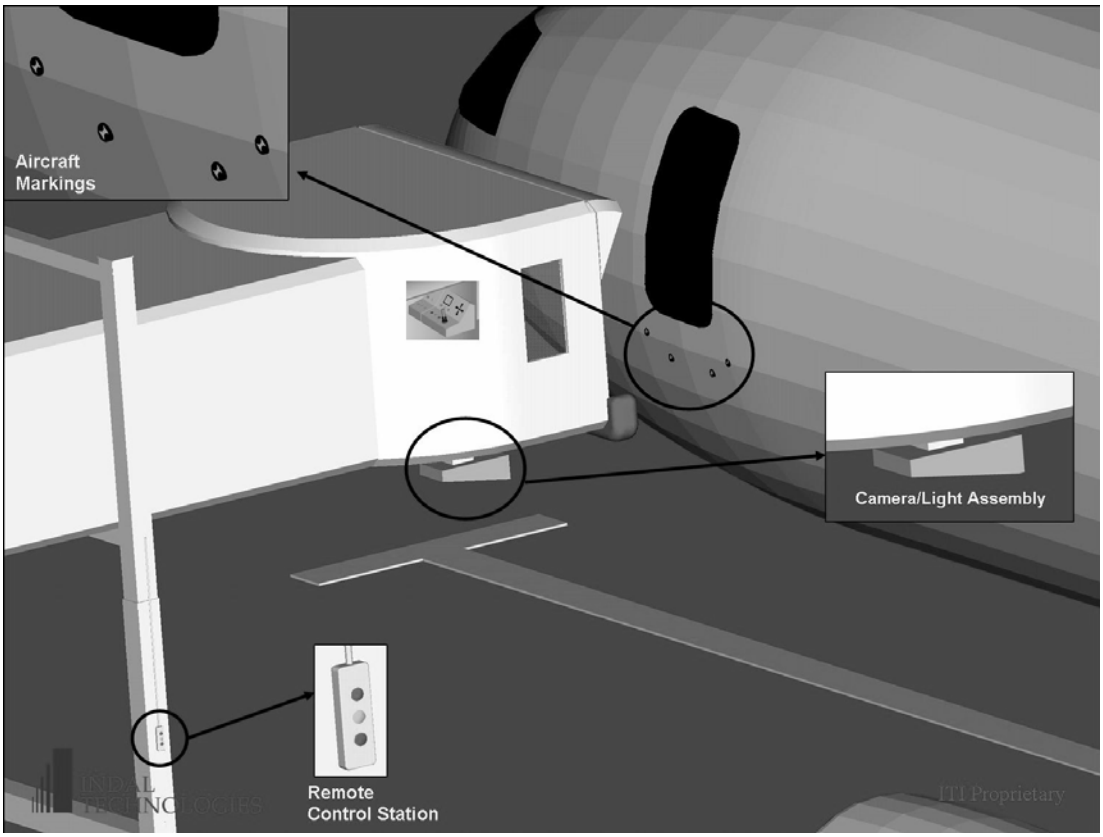

Figure 2: APB System Components

DESIGN OBJECTIVES

ITI identified a need and an opportunity to develop a system to automate the movement of the passenger boarding bridge. The principal design objective focused on the needs of airports and airlines to improve customer satisfaction by reducing the delays in both boarding and de-planing associated with waiting for a qualified operator to drive the bridge. This objective tied in to an almost universal objective to improve on time departure and arrival for normal operations. Associated with this, the system should also facilitate de-planing during a lightening condition that clears all ramp labor from the apron area.

Reducing waiting time for departure and arrival would also reduce the cost of the aircrew and the cost of fuel by reducing the waiting time to connect the auxiliary power unit. Furthermore, reducing delays associated with an aircraft movement would provide an opportunity to increase the number of turns per gate per day for high use gates.

Preliminary industry statistical information indicated a need to reduce damage done to aircraft and damage done to boarding bridges due to operator error. The types and percent of the various damages between 01/08/2000 and 31/07/2001 as reported by Flight Safety Foundation data are shown in the Figure 3.

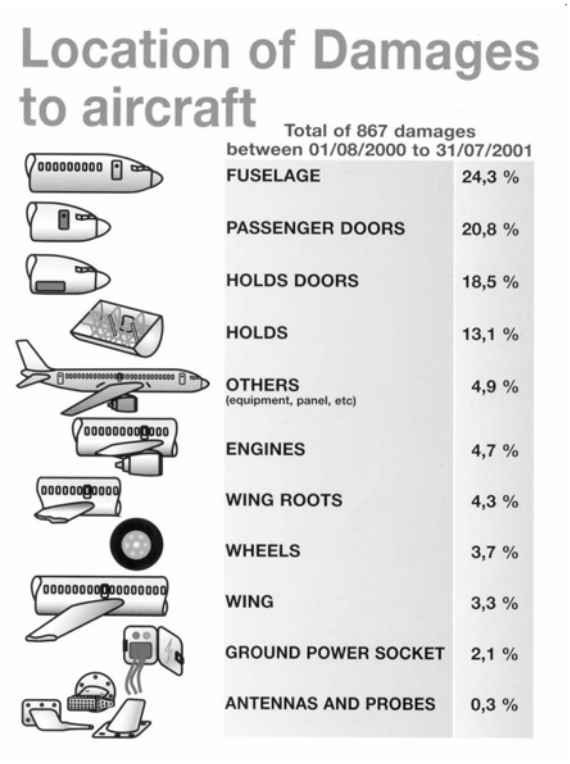

Figure 3: Damage Data

Eliminating these damages would reduce both direct and indirect costs to the airline and the airport authority. Coupled with this, ramp safety would be improved by a general reduction in accidents.

There were several secondary objectives. The elimination of the passenger bridge operator would free up labor to devote to other manually intensive operations such as baggage loading and unloading where airline or airport ramp personnel are assigned the bridge operations, and customer service where ticket agents are assigned to drive the bridge. Ultimately, there would be labor cost savings by eliminating the driver, and labor cost savings associated with operator training.

DESIGN CRITERIA

Design criteria were developed through discussions with airport authorities, airport consultants, airlines, aircraft manufacturers, passenger bridge OEMs and ground handling specialists.

Overall the APB System must provide fully automated, repeatable, reliable, single button ("push and forget"), control of the passenger bridge to extend it (to meet a newly arrived aircraft) or to retract it to the home position (to clear a departing aircraft).

Based on the above, the following design goals were defined:

- Operation with all wide and narrow body aircraft. Desirable to operate with regional jets.
- Minimal impact on aircraft.
- Compatible with all types of bridges. Expandable to control double and triple bridge gates.
- Adaptable to cope with different apron geometries including multiple lead-in lines.
- Automated docking of the bridge with aircraft with multiple doors.
- Control of the direction and speed of the drive wheels and the vertical level or height of the bridgehead.
- Control of the angular position of the bridgehead against the fuselage to ensure safe and proper mating with the aircraft doorway.
- Provide auto-leveling control via adjustment of the vertical height of the bridge or via deployment of the existing bridge automatic leveler.
- Control of the canopy and cab door (if fitted with an automatic door).
- Control of all ancillary bridge functions (i.e. warning sound, lights and interlocks) normally associated with bridge operation.
- An interface with all existing sensors and interlocks normally associated with bridge operation.
- An obstacle avoidance system to stop the motion upon detection of equipment, objects or personnel in the path of the moving passenger bridge.
- Flexibility in the control of the system - initiation by ramp crew, ticket agent, airport operation control or pilot.
- Interface to Visual Docking Guidance System (VDGS) to allow exchange of data if needed.
- Interface to airport operation control system to allow exchange of data.
- Handle exception conditions and be "fail safe" i.e. all motion stopped.
- Data logging of all operations.

Research into bridge types determined there were more than ten manufacturers worldwide, and a variety of drive mechanisms. Furthermore, there were generations of bridges ranging from older relay control units to today's bridges, which use programmable logic and computer controllers. The design criteria called for an automating system that would be able to drive all existing bridge types and those on the drawing board for new generation aircraft such as the Airbus 380.

Fortunately, all of the bridges are functionally similar, and by selecting an appropriate interface method, the APB design would be able to satisfy this criterion. The interface would also have to allow for manual operation of the bridge as required.

Another critical design criterion was the method of activation of the system. Interviews with airlines and airport authorities revealed differences in the operation of the bridges.

The responsibility for operations can be with the ramp crew or with the ticket agent. In the case of the ramp crew, it was suggested the place for activation be somewhere in the apron area. For the ticket agent, the place could be near the ticket counter. In other instances, it was suggested the aircraft pilot be able to remotely activate the system. As a result, the APB system was designed for activation from all of these positions.

REQUIREMENT SPECIFICATIONS

Accuracy

Docking accuracy was established as 2 cm in any axis.

The retracting accuracy requirement is to have the center of bogie wheels within ½ m of the defined home position.

Environmental

The design specifications called for all weather operation. The APB is designed to meet the following environmental test specifications:

- Operating temperature range from -40°C to +50°C with a humidity range of 0-95% including condensing per MIL-STD-810F;
- Shock and vibration requirements per MIL-STD-202F, Method 213B and MIL-STD-167;
- Salt Fog, Fungus, Dust, Drip proofing, Rain per MIL-STD-810F;
- Electromagnetic Radiation and Interference per FCC Part 15 for “unintentional radiators” or EN 50081 and EN 50082-2; and;
- Comply with CSA, NEC, NEMA, CE and UL 508A standards as applicable.

Reliability and Maintainability

Overall reliability is to be greater than that of the bridge itself. A MTBF rate is 2000 hours to allow operation of greater than one full year without unscheduled maintenance.

The design for maintenance dictated the accessibility of all components, a low preventative maintenance, such as regular cleaning of the camera lens and light, and the visual inspection of the markers on the plane. Repair is by component approach utilizing the system’s self-diagnostics feature.

SYSTEM DESCRIPTION

The APB system consists of a unit mounted under the bridge cab complete with a processing unit, interfaces to the bridge's control system, digital video camera (CCD) and infrared light sources unobtrusive to the pilot or ground crews. The main control station is mounted in the bridge cab. Remote control stations can be mounted in a location selected by the operator.

External to the bridge; a cluster of retro-reflective tape markers mounted on the aircraft skin in the proximity of the doors.

The APB image processing, camera and light unit is shown in Figure 4.

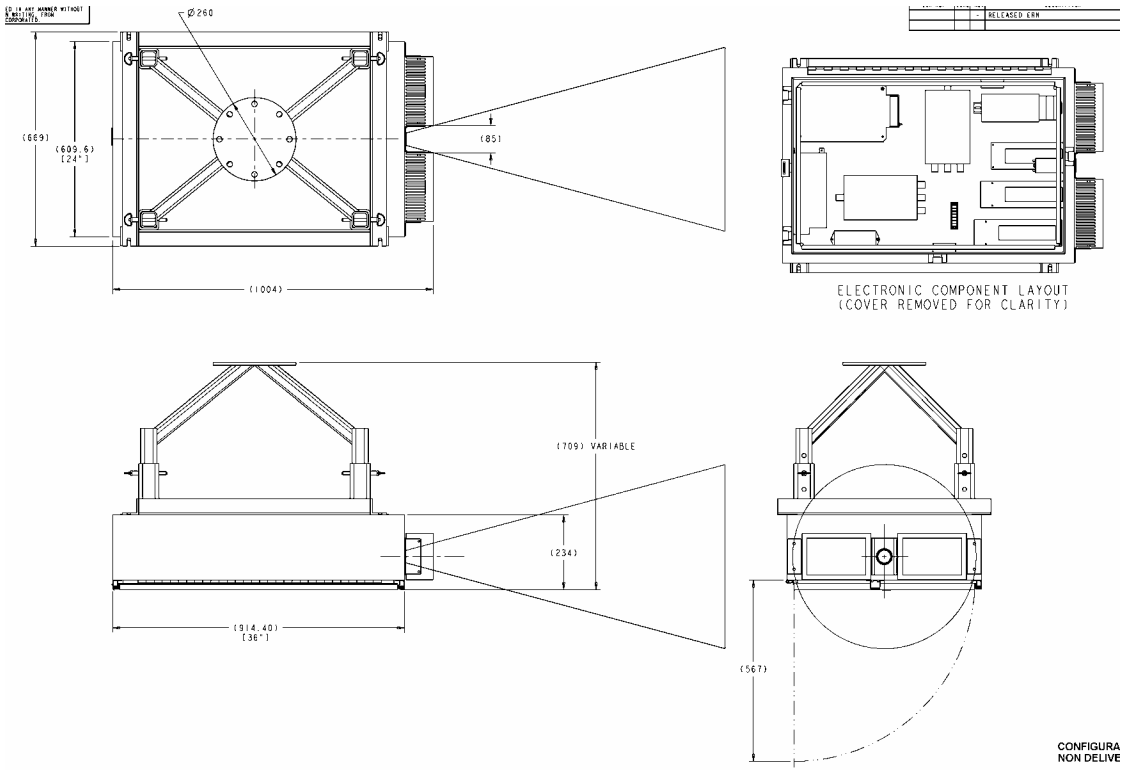

Figure 4: APB - Physical Packaging

The design criteria called for minimal impact on the aircraft. Coupled with this, whatever was put on the aircraft had to be universal for all aircraft in order to eliminate the need for human identification. This was most challenging, as ITI did not want to propose a system using the same IR beacons on the naval helicopters for use on commercial airliners. This would be too expensive and problematic considering the need to retrofit aircraft already in use. However, it was important to maintain the same type pattern as used in ASIST in order to minimize software development, and provide an aircraft position sensing system that would indicate to the bridge where the aircraft door was positioned.

After extensive investigation and testing, a small pattern of markings made from retro-reflective tape installed on the body of the aircraft just below the passenger-boarding door was found acceptable. The markings would be illuminated by an infrared light source on the bridge and seen by an infrared camera co-located with the light source. The retro-reflective tape selected is the same type already in use for aircraft decals. Once tape was selected as the markings, the challenge was to minimize the size of the markings to reduce the visual impact on the aircraft (Figure 5).

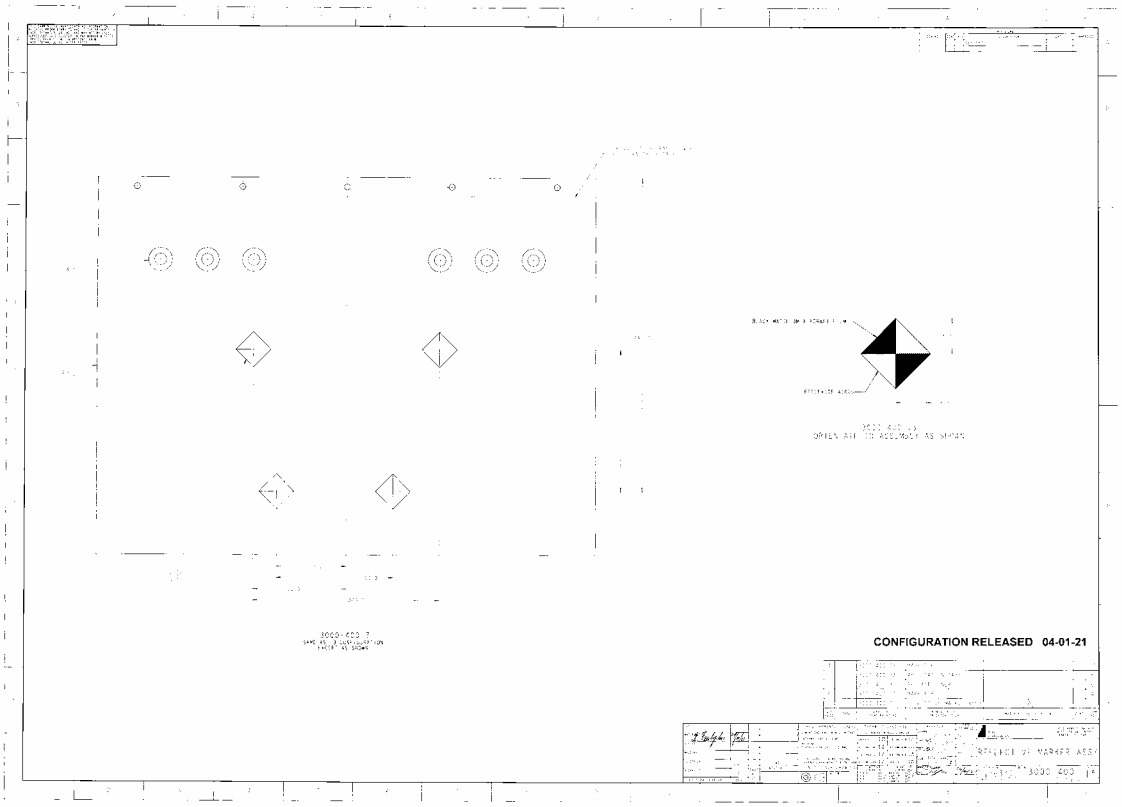

Figure 5: Marker Assembly

CONFIGURATIONS

The system can be configured for single, double and triple bridges. Only a single processing unit is required for up to 3 bridges. Camera and light units are required for each bridge. The processing unit processes the video images from each camera separately and provides motion commands to each bridge independently. Since the system knows where each bridge is at all times and is commanding their motion, the system ensures that there is no contact between the bridges in a multiple gate configuration.

Communications between the bridges is via fiber optic cable. The system block diagram depicted in Figure 6 presents a multi-bridge APB configuration.

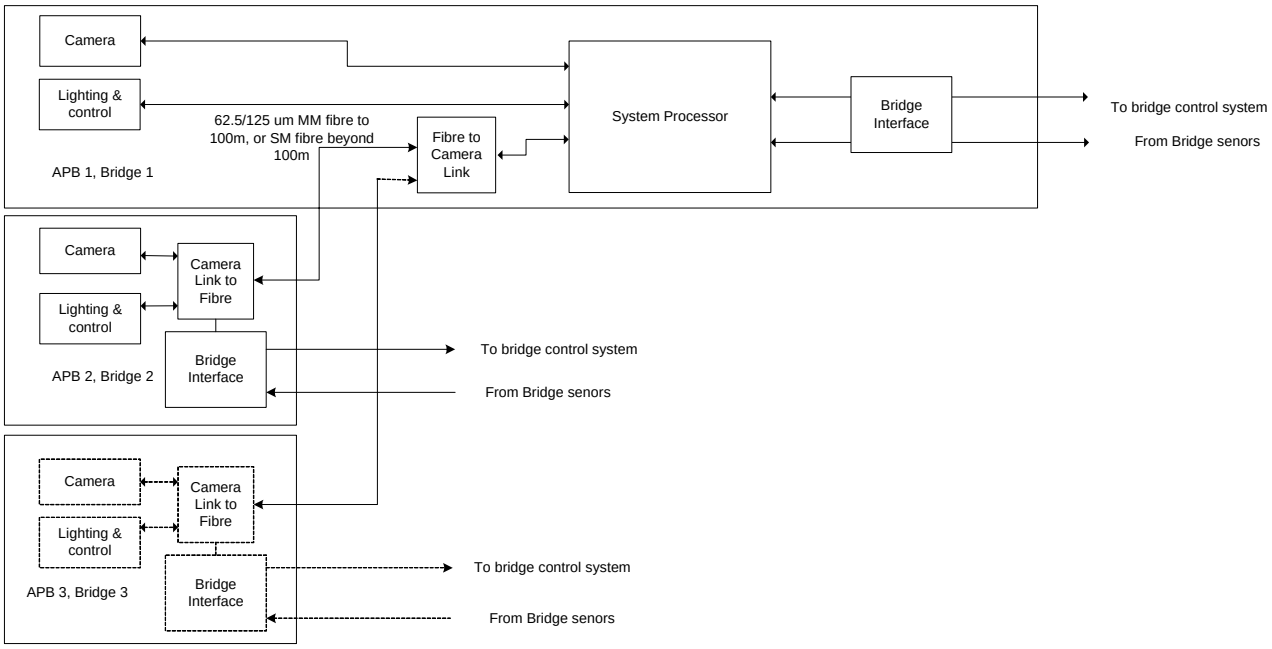

Figure 6: APB - Block Diagram

SYSTEM OPERATION

Upon operator initiation, the APB system first determines if the reflective markers are visible to the system; if not the APB will institute a search for the markers by rotating the cab. Up to 20 potential marker images could be processed till the true markers are recognized.

The images of the retro-reflective tape markers captured by the cameras are processed based on software algorithms providing:

- Pattern recognition of an aircraft door at the gate, based on marker clusters shape, size and arrangement; and
- Identification and recognition of the type of aircraft.

Target acquisition procedures use the image processing capability to process, detect, analyze and identify the aircraft-mounted pattern of markers, as they appear in each approaching camera's field of view. The system is able to discriminate marker images from the false target images caused by reflections, sunlight and other light sources in camera's field of view. Target detection and analysis algorithms perform segment detection, determine the connectivity of segments in the detection, isolation and analysis of the target images, and compute the features of the target images and qualify the markers as candidate targets.

A target discrimination algorithm is used to discriminate the marker images from a list of candidate images. Camera photogrammetry is used to analyze the input images to determine if

they represent a true marker. If camera photogrammetry converges to a solution that is within expected position ranges, then a solution is declared as found. Once the markers are located, the system calculates the location of the aircraft doors. The APB system then indicates to the operator/pilot that the doors have been successfully located and provides movement commands to the bridge control system. The processing unit continues to:

- Capture frames from the video camera at a rate of ten per second.
- Continuously track the retro-reflective markers, perform photogrammetry algorithms and accurately calculate the aircraft door position.
- Provide for bridge automatic (or supervised) motion control during complete docking and retracted procedures.
- While the bridge is docked to the aircraft, provides signals to control the motion of the cab relative to the aircraft ("auto-levelling").

INTERFACES

Bridge Control Interface

The APB will interface to the bridge by a combination of paralleling the operator control and direct input to the bridge control unit.

Operator User Interface

The APB system is equipped with two user interface modes, designed to provide either fully automatic or supervised control of the bridge. In addition, a local and a remote control station are available for all bridges. The stations controls and indicators provide for motion (approach and retract) initialization, fault indicators and emergency stop. Interlocks and operator access privileges ensure safety during bridge operation.

Maintenance User Interface

The APB maintenance user interface consists of an MS-Windows™ based program running on a PC connected to the Ethernet port of the image-processing unit. The user interface provides the means to set and obtain the configuration parameters and initiate self-test.

The APB data-logging device provides real-time logged data to an output file on the PC. Historical information is kept for analysis and for operation re-creation.

Built-in Self-Test

The APB provides for a background self-test operation and on-demand self-test. The system self-test on power up is passed on to the bridge control system. The APB self-test capabilities may be invoked from the User Interface to generate a system diagnostic report for the purpose of fault detection and isolation. The report includes pass/fail indications, along with detailed fault isolation information where applicable.

Additional Sensors

The APB system will require that the following sensors/information be available from the bridge, if they are not available these are added as part of the APB system installation:

- Wheel bogie angle ± 2 degrees accuracy;
- Rotunda angle of 0.2 degrees resolution and linearity +/- 0.5% over a measurement range of +/- 90.0 degrees;
- Vertical height sensor with an accuracy of ±0.10 m (used during retraction to home position);
- Cab rotation position with an accuracy of ±2 degrees.

MODES OF OPERATION

Standby

In standby mode the APB provides following operations upon flight arrival:

1. Detect aircraft arriving at the gate;
2. Determine the location and orientation of the Passenger Boarding Bridge (PBB);
3. If in home position, rotate cab if necessary to nominal position;
4. Provide information to the operator on clear/ready status.

Engage

Upon operator initialization the APB shall:

1. Initiate standard warning lights and sounds to alert ground personnel of the bridge expected movement.
2. Provide smooth, controlled and safe maneuvering of the Passenger Boarding Bridge from the parked position to the aircraft.
3. Control the bridge speed to automatically decrease it until the bridge reaches the docked position.
4. Perform the final docking sequence of the Passenger Boarding Bridge auxiliary functions and provide information on docking status.
5. End the Engage operation when the PBB is docked to the aircraft.

Docked

While the bridge is docked to the aircraft, it will continue to track the targets, and react to motion of the aircraft relative to the cab.

1. If the measured height difference varies by more than 5 cm, and "APB-Levelling" is enabled, the system will command the bridge to readjust the height to restore the initial docking offset.

2. If the measured height difference varies by more than 10 cm (whether "APB-Levelling" is enabled or not), the system will sound the siren and flash the hazard light for 2 seconds, or until the initial offset is restored, whichever comes first.
3. If the measured relative position along the lead-in line (aircraft fore/aft) changes by more than 10 cm for one second, the system will sound the siren and flash the hazard light until the offset is restored, or any of the APB control buttons are pushed.
4. If the measured distance to the aircraft door varies by more than 10 cm for one second, the system will sound the siren and flash the hazard light until the offset is restored, or any of the APB control buttons are pushed.

Disengage

This mode of operation involves APB operation upon flight departure.

This operation scenario starts with the Passenger Boarding Bridge docked to the aircraft. After the aircraft is loaded, the door is closed, and the aircraft APU is disconnected.

Upon operator initialization APB shall provide*:*

1. Smooth, controlled and safe maneuvering of the PBB from the aircraft to the parked position.
2. End the disengage operation when both wheels of the bridge are within the defined area of the PPB parked position.

Exception Conditions

The APB system handles in a safe manner the following exception conditions:

1. No targets detected/targets lost.
2. Collision avoidance system detects object.
3. Bridge limit sensors active (conditions TBD).
4. Emergency Stop button activated.

APB TESTING PROGRAM

Hardware, software development and testing of the Automated Passenger Bridge (APB) System was organized in three stages, each stage building on the functionality of the system and providing validation of the hardware and software. ITI Test Plan 02-640 details the overall test strategy.

Stage 1 - the first stage was the Engineering Development Model (EDM), which consisted of non-representative hardware (existing lab/test equipment) used to verify the basic vision and control software. Initial testing was held at ITI to verify operation of the vision system with reflective markers. Maximum range and reflective angles were determined. The motion software was verified using a bridge simulation program. Following these tests, the EDM was moved to the airport and connected temporarily into the bridge control console. No auxiliary

bridge functions were controlled and all operator interfaces were through a computer. Motion testing was first performed by commanding bridge motion through the software. Once it was verified that the software could control the bridge and receive the right feedback, the vision and the motion software were integrated, and testing of the basic APB system began. Testing was carried out using a simulated aircraft skin mounted on a lift in the back of a pick up truck. This testing proved that the system was able to detect and track the markers as the bridge was controlled to dock with the simulated skin.

Stage 2 - the next stage was the development of prototype hardware, which is close to the configuration of the final product but neither in the final packaging nor cost optimized. Camera and light environmental tests in accordance with ITI TP-P-543 were carried out to ensure that the exposed hardware items could meet the environmental specifications. Control of auxiliary functions such as door, canopy, lights collision avoidance, etc. were added and tested. Main and remote control stations were also developed and tested. Software functionality was increased to manage additional control functions, exception and error handling as well as the operator interface. The motion software was also improved to give more optimal bridge movement and better docking accuracy. ITI test procedure TP-P564 "Test procedure for Integration and Test using Simulated Aircraft" was performed.

A demonstration of the 1st Prototype system was given to senior Air Canada staff in November of 2003. Based on this, Air Canada gave the approval for aircraft testing to begin. Installation of the markers was performed in early January and testing with aircraft started in late January 04.

Testing and development will continue with both airplanes and the simulated aircraft through February and March. This period will be used to optimize performance of both the software and hardware. Further development will include system status reporting to the operator. Operating procedures will be finalized and an operator manual will be published. This stage will end with the performance and sign off of TP-P-565, which is the acceptance test of the system using Air Canada aircraft.

In April the system will enter a two to three month operation trial with Air Canada. The system will be operated by AC personnel with operational flights. Air Canada will gather performance statistics and feed back operational issues to ITI.

A second prototype will begin construction shortly for United Airlines at O'Hare. This prototype will be installed in the June time frame. After a two to three week period of performance tests to verify its operation to United, the system will be turned over to United for two to three months of operation evaluation.

From the feedback received on the operation evaluations of the two prototypes we expect to update/or modify some of the operations/functions of the system to better meet the airline requirements.

Stage 3 - The final stage of development consists of the building of a number pre-production systems. These systems will be used to set up the manufacturing procedures and develop the automated test equipment required for volume manufacturing. Acceptance criteria and a

production acceptance test procedure will be developed. A pre-production system will also undergo full environmental testing to validate the design.

CONCLUSION

The objectives of the design development and test of the APB system have been met. ITI anticipates being ready for full-scale production by July 2004.